FEATURES

- Excellent solder ability and high heat resistance.
- Excellent terminal strength construction.
- Surface mount inductor with high current rating.
- Packed in embossed carrier tape and can be used by automatic mounting machine.

APPLICATIONS

- Ideally used in Mobilephone,PDA,MP3, DVC, portable DVD etc as DC-DC Converter inductors

PRODUCT IDENTIFICATION

SD 0302F – 221 M - T
a b c d e

a : Series name
b : Product dimensions
c : Inductance Value (1R0:1.0uH; 100: 10uH; 101:100uH)
d : Inductance Tolerance (K:10% ; M:20% ; N:30%)
e : Packaging style (T: Taping; B: bulk)

SHAPES AND DIMENSIONS Unit: mm

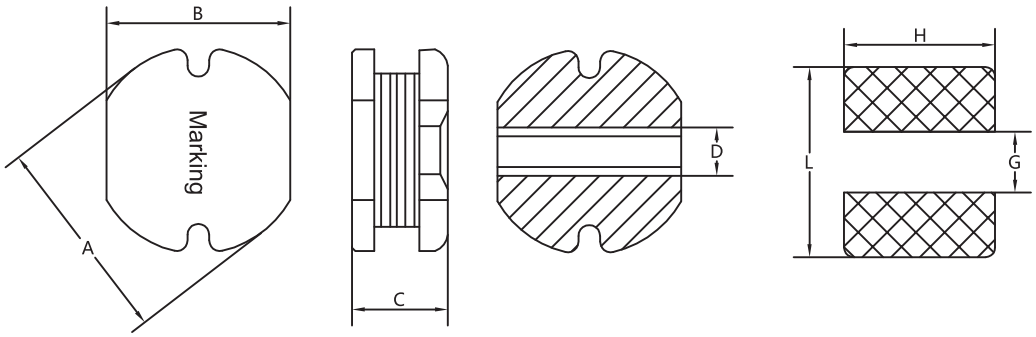

Series	Dimensions(mm)						
	A	B	C	D	L	G	H
SD0301F	3.5±0.3	3.0±0.3	1.1±0.3	1.0	3.9	1.0	3.2
SD0302F	3.5±0.3	3.0±0.3	2.1±0.3	1.0	3.9	1.0	3.2
SD0402F	4.5±0.3	4.0±0.3	2.0±0.3	1.4	5.0	1.2	4.5
SD0403F	4.5±0.3	4.0±0.3	3.2±0.3	1.4	5.0	1.2	4.5
SD0503F	5.8±0.3	5.2±0.3	3.2±0.3	1.6	6.5	1.5	5.5
SD0504F	5.8±0.3	5.2±0.3	4.5±0.3	1.6	6.5	1.5	5.5
SD0703F	7.8±0.3	7.0±0.3	3.5±0.3	2.4	9.2	2.1	7.5
SD0705F	7.8±0.3	7.0±0.3	5.0±0.3	2.4	9.2	2.1	7.5
SD1004F	10.0±0.3	9.0±0.3	4.0±0.3	2.9	11.0	2.5	9.5
SD1005F	10.0±0.3	9.0±0.3	5.4±0.3	2.9	11.0	2.5	9.5
SD1307F	13.0±0.5	13.0±0.5	7.0±0.3	5.0	15.0	4.5	13.7

ELECTRICAL CHARACTERISTICS

Part Number	L(uH)	Test Freq.(KHz)	DCR max.(Ω)	Rated Current(A)
SD0301F-1R2MT	1.2	100	0.099	1.24
SD0301F-1R5MT	1.5	100	0.128	1.06
SD0301F-2R2MT	2.2	100	0.194	0.88
SD0301F-3R3MT	3.3	100	0.270	0.79
SD0301F-3R9MT	3.9	100	0.321	0.68
SD0301F-4R7MT	4.7	100	0.376	0.66
SD0301F-5R6MT	5.6	100	0.393	0.61
SD0301F-6R8MT	6.8	100	0.485	0.56
SD0301F-8R2MT	8.2	100	0.628	0.50
SD0301F-100MT	10	100	0.809	0.45
SD0301F-120MT	12	100	0.901	0.40
SD0301F-150MT	15	100	1.063	0.37
SD0301F-180MT	18	100	1.231	0.34
SD0301F-220MT	22	100	1.750	0.31
SD0301F-270MT	27	100	2.113	0.28
SD0301F-330MT	33	100	2.888	0.24
SD0301F-390MT	39	100	3.100	0.23
SD0301F-470MT	47	100	3.513	0.21
SD0301F-560MT	56	100	3.950	0.20
SD0301F-680MT	68	100	5.688	0.18
SD0301F-820MT	82	100	6.575	0.15
SD0301F-101KT	100	100	7.700	0.14

Part Number	L(uH)	Test Freq.(KHz)	DCR max.(Ω)	Rated Current(A)
SD0302F-2R2MT	2.2	100	0.080	1.80
SD0302F-2R7MT	2.7	100	0.110	1.70
SD0302F-3R3MT	3.3	100	0.130	1.60
SD0302F-4R7MT	4.7	100	0.170	1.50
SD0302F-5R6MT	5.6	100	0.185	1.20
SD0302F-6R8MT	6.8	100	0.200	1.05
SD0302F-8R2MT	8.2	100	0.220	0.90
SD0302F-100MT	10	100	0.230	0.76
SD0302F-120MT	12	100	0.270	0.68
SD0302F-150MT	15	100	0.310	0.63
SD0302F-180MT	18	100	0.410	0.52
SD0302F-220MT	22	100	0.470	0.50
SD0302F-270MT	27	100	0.660	0.40
SD0302F-330MT	33	100	0.760	0.38
SD0302F-390MT	39	100	0.850	0.35

Note:

Rated current: The DC current at which the inductance decreases to 90 % of its initial value or when △t=40℃, whichever is lower(Ta=20℃)

ELECTRICAL CHARACTERISTICS

Part Number	L(uH)	Test Freq.(KHz)	DCR max.(Ω)	Rated Current(A)
SD0302F-470MT	47	100	0.970	0.33
SD0302F-560MT	56	100	1.250	0.29
SD0302F-680MT	68	100	1.450	0.27
SD0302F-820MT	82	100	1.850	0.23
SD0302F-101KT	100	100	2.200	0.22
SD0302F-121KT	120	100	2.900	0.18
SD0302F-151KT	150	100	3.400	0.17
SD0302F-181KT	180	100	3.900	0.16
SD0302F-221KT	220	100	4.500	0.15
SD0302F-271KT	270	100	6.000	0.13
SD0302F-331KT	330	100	7.000	0.12
SD0302F-391KT	390	100	7.800	0.11

Part Number	L(uH)	Test Freq.(KHz)	DCR max.(Ω)	Rated Current(A)
SD0402F-1R0MT	1.0	100	0.030	2.50
SD0402F-1R5MT	1.5	100	0.040	2.30
SD0402F-1R8MT	1.8	100	0.050	2.00
SD0402F-2R2MT	2.2	100	0.060	1.80
SD0402F-3R3MT	3.3	100	0.080	1.50
SD0402F-4R7MT	4.7	100	0.106	1.20
SD0402F-6R8MT	6.8	100	0.135	1.00
SD0402F-100MT	10	100	0.195	0.80
SD0402F-150MT	15	100	0.330	0.70
SD0402F-220MT	22	100	0.486	0.60
SD0402F-330MT	33	100	0.640	0.55
SD0402F-390MT	39	100	0.700	0.50
SD0402F-470MT	47	100	0.950	0.40
SD0402F-680MT	68	100	1.350	0.30
SD0402F-101KT	100	100	1.710	0.25
SD0402F-151KT	150	100	2.530	0.24
SD0402F-221KT	220	100	4.200	0.23
SD0402F-331KT	330	100	5.300	0.20
SD0402F-391KT	390	100	6.820	0.18
SD0402F-471KT	470	100	7.780	0.15

Note:

Rated current: The DC current at which the inductance decreases to 90 % of its initial value or when △t=40℃, whichever is lower(Ta=20℃)

ELECTRICAL CHARACTERISTICS

Part Number	L(uH)	Test Freq.(KHz)	DCR max.(Ω)	Rated Current(A)
SD0403F-1R0MT	1.0	100	0.033	3.80
SD0403F-1R5MT	1.5	100	0.038	3.30
SD0403F-1R8MT	1.8	100	0.042	2.91
SD0403F-2R2MT	2.2	100	0.047	2.60
SD0403F-2R7MT	2.7	100	0.052	2.43
SD0403F-3R3MT	3.3	100	0.058	2.15
SD0403F-3R9MT	3.9	100	0.076	1.98
SD0403F-4R7MT	4.7	100	0.094	1.70
SD0403F-5R6MT	5.6	100	0.101	1.60
SD0403F-6R8MT	6.8	100	0.117	1.41
SD0403F-8R2MT	8.2	100	0.132	1.26
SD0403F-100MT	10	100	0.182	1.15
SD0403F-120MT	12	100	0.210	1.05
SD0403F-150MT	15	100	0.235	0.92
SD0403F-180MT	18	100	0.338	0.84
SD0403F-220MT	22	100	0.378	0.76
SD0403F-270MT	27	100	0.522	0.71
SD0403F-330MT	33	100	0.540	0.64
SD0403F-390MT	39	100	0.587	0.59
SD0403F-470MT	47	100	0.844	0.54
SD0403F-560MT	56	100	0.937	0.50
SD0403F-680MT	68	100	1.117	0.46
SD0403F-820MT	82	100	1.345	0.45
SD0403F-101KT	100	100	1.520	0.44
SD0403F-121KT	120	100	1.800	0.43
SD0403F-151KT	150	100	2.000	0.42
SD0403F-181KT	180	100	3.200	0.38
SD0403F-221KT	220	100	3.400	0.36
SD0403F-271KT	270	100	3.900	0.34
SD0403F-331KT	330	100	5.300	0.28
SD0403F-391KT	390	100	5.900	0.24
SD0403F-471KT	470	100	6.800	0.21
SD0403F-561KT	560	100	8.500	0.20
SD0403F-681KT	680	100	10.000	0.18
SD0403F-821KT	820	100	13.400	0.15
SD0403F-102KT	1000	100	15.600	0.14

Note:

Rated current: The DC current at which the inductance decreases to 90 % of its initial value or when △t=40℃, whichever is lower(Ta=20℃)

ELECTRICAL CHARACTERISTICS

Part Number	L(uH)	Test Freq.(KHz)	DCR max.(Ω)	Rated Current(A)
SD0503F-1R0MT	1.0	100	0.030	4.50
SD0503F-1R2MT	1.2	100	0.030	4.20
SD0503F-1R5MT	1.5	100	0.030	4.10
SD0503F-1R8MT	1.8	100	0.030	3.70
SD0503F-2R2MT	2.2	100	0.030	3.50
SD0503F-2R7MT	2.7	100	0.040	3.20
SD0503F-3R3MT	3.3	100	0.050	2.80
SD0503F-3R9MT	3.9	100	0.060	2.60
SD0503F-4R7MT	4.7	100	0.070	2.50
SD0503F-5R6MT	5.6	100	0.080	2.40
SD0503F-6R8MT	6.8	100	0.090	2.20
SD0503F-8R2MT	8.2	100	0.100	2.00
SD0503F-100MT	10	100	0.120	1.80
SD0503F-120MT	12	100	0.130	1.75
SD0503F-150MT	15	100	0.150	1.70
SD0503F-180MT	18	100	0.180	1.60
SD0503F-220MT	22	100	0.220	1.50
SD0503F-270MT	27	100	0.240	1.40
SD0503F-330MT	33	100	0.300	1.10
SD0503F-390MT	39	100	0.400	1.00
SD0503F-470MT	47	100	0.430	0.90
SD0503F-560MT	56	100	0.500	0.85
SD0503F-680MT	68	100	0.600	0.80
SD0503F-820MT	82	100	0.800	0.65
SD0503F-101KT	100	100	0.900	0.60
SD0503F-121KT	120	100	1.000	0.58
SD0503F-151KT	150	100	1.300	0.43
SD0503F-181KT	180	100	1.500	0.41
SD0503F-221KT	220	100	2.000	0.38
SD0503F-271KT	270	100	2.500	0.35
SD0503F-331KT	330	100	3.200	0.28
SD0503F-391KT	390	100	3.500	0.26
SD0503F-471KT	470	100	4.200	0.20
SD0503F-561KT	560	100	4.500	0.19
SD0503F-681KT	680	100	6.000	0.18
SD0503F-821KT	820	100	6.500	0.15
SD0503F-102KT	1000	100	8.000	0.13

Note:

Rated current: The DC current at which the inductance decreases to 90 % of its initial value or when △t=40℃, whichever is lower(Ta=20℃)

ELECTRICAL CHARACTERISTICS

Part Number	L(uH)	Test Freq.(KHz)	DCR max.(Ω)	Rated Current(A)
SD0504F-1R0MT	1.0	100	0.015	5.90
SD0504F-1R2MT	1.2	100	0.020	5.20
SD0504F-1R5MT	1.5	100	0.025	4.70
SD0504F-1R8MT	1.8	100	0.030	4.00
SD0504F-2R2MT	2.2	100	0.035	3.80
SD0504F-2R7MT	2.7	100	0.040	3.40
SD0504F-3R3MT	3.3	100	0.045	3.30
SD0504F-3R9MT	3.9	100	0.050	2.90
SD0504F-4R7MT	4.7	100	0.060	2.80
SD0504F-5R6MT	5.6	100	0.070	2.40
SD0504F-6R8MT	6.8	100	0.080	2.10
SD0504F-8R2MT	8.2	100	0.090	2.00
SD0504F-100MT	10	100	0.100	1.44
SD0504F-120MT	12	100	0.120	1.40
SD0504F-150MT	15	100	0.140	1.30
SD0504F-180MT	18	100	0.150	1.23
SD0504F-220MT	22	100	0.180	1.11
SD0504F-270MT	27	100	0.200	0.97
SD0504F-330MT	33	100	0.230	0.88
SD0504F-390MT	39	100	0.320	0.80
SD0504F-470MT	47	100	0.370	0.72
SD0504F-560MT	56	100	0.420	0.68
SD0504F-680MT	68	100	0.460	0.61
SD0504F-820MT	82	100	0.600	0.58
SD0504F-101KT	100	100	0.700	0.52
SD0504F-121KT	120	100	0.930	0.48
SD0504F-151KT	150	100	1.100	0.40
SD0504F-181KT	180	100	1.380	0.38
SD0504F-221KT	220	100	1.570	0.35
SD0504F-271KT	270	100	1.650	0.32
SD0504F-331KT	330	100	1.700	0.28
SD0504F-391KT	390	100	1.800	0.26
SD0504F-471KT	470	100	2.300	0.23
SD0504F-561KT	560	100	2.500	0.20
SD0504F-681KT	680	100	3.000	0.19
SD0504F-821KT	820	100	4.500	0.16
SD0504F-102KT	1000	100	4.800	0.14

Note:

Rated current: The DC current at which the inductance decreases to 90 % of its initial value or when △t=40℃, whichever is lower(Ta=20℃)

ELECTRICAL CHARACTERISTICS

Part Number	L(uH)	Test Freq.(KHz)	DCR max.(Ω)	Rated Current(A)
SD0703F-1R0MT	1.0	100	0.010	6.00
SD0703F-1R5MT	1.5	100	0.013	5.80
SD0703F-2R2MT	2.2	100	0.018	5.20
SD0703F-3R3MT	3.3	100	0.025	4.00
SD0703F-4R7MT	4.7	100	0.035	3.50
SD0703F-5R6MT	5.6	100	0.040	3.00
SD0703F-6R8MT	6.8	100	0.050	2.50
SD0703F-8R2MT	8.2	100	0.060	2.00
SD0703F-100MT	10	100	0.080	1.44
SD0703F-120MT	12	100	0.090	1.33
SD0703F-150MT	15	100	0.100	1.24
SD0703F-180MT	18	100	0.110	1.12
SD0703F-220MT	22	100	0.130	1.07
SD0703F-270MT	27	100	0.150	0.94
SD0703F-330MT	33	100	0.170	0.85
SD0703F-390MT	39	100	0.220	0.74
SD0703F-470MT	47	100	0.250	0.68
SD0703F-560MT	56	100	0.280	0.64
SD0703F-680MT	68	100	0.330	0.59
SD0703F-820MT	82	100	0.410	0.54
SD0703F-101KT	100	100	0.480	0.51
SD0703F-121KT	120	100	0.540	0.49
SD0703F-151KT	150	100	0.750	0.40
SD0703F-181KT	180	100	1.020	0.36
SD0703F-221KT	220	100	1.200	0.31
SD0703F-271KT	270	100	1.310	0.29
SD0703F-331KT	330	100	1.500	0.28
SD0703F-391KT	390	100	1.850	0.25
SD0703F-471KT	470	100	2.200	0.22
SD0703F-561KT	560	100	2.600	0.20
SD0703F-681KT	680	100	3.200	0.13
SD0703F-821KT	820	100	3.900	0.11
SD0703F-102KT	1000	100	4.500	0.08

Note:

Rated current: The DC current at which the inductance decreases to 90 % of its initial value or when △t=40℃, whichever is lower(Ta=20℃)

ELECTRICAL CHARACTERISTICS

Part Number	L(uH)	Test Freq.(KHz)	DCR max.(Ω)	Rated Current(A)
SD0705F-1R0MT	1.0	100	0.030	11.2
SD0705F-1R2MT	1.2	100	0.030	9.87
SD0705F-1R5MT	1.5	100	0.040	8.35
SD0705F-1R8MT	1.8	100	0.040	7.12
SD0705F-2R2MT	2.2	100	0.050	6.52
SD0705F-2R7MT	2.7	100	0.060	6.06
SD0705F-3R3MT	3.3	100	0.060	5.26
SD0705F-3R9MT	3.9	100	0.060	4.68
SD0705F-4R7MT	4.7	100	0.070	4.54
SD0705F-5R6MT	5.6	100	0.070	4.25
SD0705F-6R8MT	6.8	100	0.070	3.45
SD0705F-8R2MT	8.2	100	0.070	3.10
SD0705F-100MT	10	100	0.070	2.30
SD0705F-120MT	12	100	0.080	2.00
SD0705F-150MT	15	100	0.090	1.80
SD0705F-180MT	18	100	0.100	1.60
SD0705F-220MT	22	100	0.110	1.50
SD0705F-270MT	27	100	0.120	1.30
SD0705F-330MT	33	100	0.130	1.20
SD0705F-390MT	39	100	0.160	1.10
SD0705F-470MT	47	100	0.180	1.10
SD0705F-560MT	56	100	0.240	0.94
SD0705F-680MT	68	100	0.280	0.85
SD0705F-820MT	82	100	0.370	0.78
SD0705F-101KT	100	100	0.430	0.72
SD0705F-121KT	120	100	0.470	0.66
SD0705F-151KT	150	100	0.640	0.58
SD0705F-181KT	180	100	0.710	0.51
SD0705F-221KT	220	100	0.960	0.49
SD0705F-271KT	270	100	1.110	0.42
SD0705F-331KT	330	100	1.260	0.40
SD0705F-391KT	390	100	1.770	0.36
SD0705F-471KT	470	100	1.960	0.34
SD0705F-561KT	560	100	2.000	0.33
SD0705F-681KT	680	100	2.200	0.32
SD0705F-821KT	820	100	2.900	0.25
SD0705F-102KT	1000	100	3.600	0.23

Note:

Rated current: The DC current at which the inductance decreases to 90 % of its initial value or when △t=40℃, whichever is lower(Ta=20℃)

ELECTRICAL CHARACTERISTICS

Part Number	L(uH)	Test Freq.(KHz)	DCR max.(Ω)	Rated Current(A)
SD1004F-1R0MT	1.0	100	0.008	9.00
SD1004F-1R5MT	1.5	100	0.010	8.00
SD1004F-2R2MT	2.2	100	0.013	6.20
SD1004F-2R7MT	2.7	100	0.014	5.60
SD1004F-3R9MT	3.9	100	0.020	5.00
SD1004F-4R7MT	4.7	100	0.022	4.50
SD1004F-5R6MT	5.6	100	0.025	3.80
SD1004F-6R8MT	6.8	100	0.030	3.00
SD1004F-8R2MT	8.2	100	0.040	2.60
SD1004F-100MT	10	100	0.053	2.38
SD1004F-120MT	12	100	0.061	2.13
SD1004F-150MT	15	100	0.070	1.87
SD1004F-180MT	18	100	0.081	1.73
SD1004F-220MT	22	100	0.088	1.60
SD1004F-270MT	27	100	0.100	1.44
SD1004F-330MT	33	100	0.120	1.26
SD1004F-390MT	39	100	0.151	1.20
SD1004F-470MT	47	100	0.170	1.10
SD1004F-560MT	56	100	0.199	1.01
SD1004F-680MT	68	100	0.223	0.91
SD1004F-820MT	82	100	0.252	0.85
SD1004F-101KT	100	100	0.344	0.74
SD1004F-121KT	120	100	0.394	0.69
SD1004F-151KT	150	100	0.544	0.61
SD1004F-181KT	180	100	0.621	0.56
SD1004F-221KT	220	100	0.721	0.53
SD1004F-271KT	270	100	0.949	0.45
SD1004F-331KT	330	100	1.100	0.42
SD1004F-391KT	390	100	1.245	0.38
SD1004F-471KT	470	100	1.526	0.35
SD1004F-561KT	560	100	1.904	0.32
SD1004F-681KT	680	100	2.200	0.30
SD1004F-821KT	820	100	2.600	0.28
SD1004F-102KT	1000	100	3.000	0.26

Note:

Rated current: The DC current at which the inductance decreases to 90 % of its initial value or when △t=40℃, whichever is lower(Ta=20℃)

ELECTRICAL CHARACTERISTICS

Part Number	L(uH)	Test Freq.(KHz)	DCR max.(Ω)	Rated Current(A)
SD1005F-2R2MT	2.2	100	0.013	7.50
SD1005F-3R3MT	3.3	100	0.015	6.50
SD1005F-4R7MT	4.7	100	0.020	5.50
SD1005F-5R6MT	5.6	100	0.025	5.00
SD1005F-6R8MT	6.8	100	0.030	4.20
SD1005F-8R2MT	8.2	100	0.050	3.50
SD1005F-100MT	10	100	0.060	2.60
SD1005F-120MT	12	100	0.070	2.45
SD1005F-150MT	15	100	0.080	2.27
SD1005F-180MT	18	100	0.090	2.15
SD1005F-220MT	22	100	0.100	1.95
SD1005F-270MT	27	100	0.110	1.76
SD1005F-330MT	33	100	0.120	1.50
SD1005F-390MT	39	100	0.140	1.37
SD1005F-470MT	47	100	0.170	1.28
SD1005F-560MT	56	100	0.190	1.17
SD1005F-680MT	68	100	0.220	1.11
SD1005F-820MT	82	100	0.250	1.00
SD1005F-101KT	100	100	0.350	0.97
SD1005F-121KT	120	100	0.400	0.89
SD1005F-151KT	150	100	0.470	0.78
SD1005F-181KT	180	100	0.630	0.72
SD1005F-221KT	220	100	0.730	0.66
SD1005F-271KT	270	100	0.970	0.57
SD1005F-331KT	330	100	1.150	0.52
SD1005F-391KT	390	100	1.300	0.48
SD1005F-471KT	470	100	1.480	0.42
SD1005F-561KT	560	100	1.900	0.39
SD1005F-681KT	680	100	2.250	0.37
SD1005F-821KT	820	100	2.550	0.35
SD1005F-102KT	1000	100	2.700	0.32

Note:

Rated current: The DC current at which the inductance decreases to 90 % of its initial value or when △t=40℃, whichever is lower(Ta=20℃)

ELECTRICAL CHARACTERISTICS

Part Number	L(uH)	Test Freq.(KHz)	DCR max.(Ω)	Isat.(A)	Irms.(A)
SD1307F-1R5NT	1.5	100	0.006	20.0	9.70
SD1307F-2R2NT	2.2	100	0.007	18.0	9.20
SD1307F-2R7NT	2.7	100	0.008	16.0	8.40
SD1307F-3R3NT	3.3	100	0.009	15.0	7.70
SD1307F-4R7NT	4.7	100	0.010	13.0	7.20
SD1307F-5R6NT	5.6	100	0.015	11.0	6.70
SD1307F-6R8NT	6.8	100	0.017	10.8	6.20
SD1307F-8R2MT	8.2	100	0.019	9.8	6.00
SD1307F-100MT	10	100	0.021	9.3	5.80
SD1307F-120MT	12	100	0.030	8.1	5.10
SD1307F-150MT	15	100	0.034	7.5	4.70
SD1307F-180MT	18	100	0.036	7.0	4.40
SD1307F-220MT	22	100	0.047	6.5	3.80
SD1307F-270MT	27	100	0.060	5.5	3.50
SD1307F-330MT	33	100	0.065	5.0	3.20
SD1307F-390MT	39	100	0.075	4.7	3.00
SD1307F-470MT	47	100	0.082	4.2	2.80
SD1307F-560MT	56	100	0.095	3.8	2.60
SD1307F-680MT	68	100	0.120	3.5	2.40
SD1307F-820MT	82	100	0.140	3.2	2.20
SD1307F-101KT	100	100	0.180	3.0	2.00
SD1307F-121KT	120	100	0.210	2.8	1.80
SD1307F-151KT	150	100	0.250	2.6	1.60
SD1307F-181KT	180	100	0.280	2.3	1.50
SD1307F-221KT	220	100	0.360	2.1	1.30
SD1307F-271KT	270	100	0.410	1.8	1.20
SD1307F-331KT	330	100	0.520	1.6	1.10
SD1307F-391KT	390	100	0.600	1.5	1.00
SD1307F-471KT	470	100	0.720	1.4	0.90
SD1307F-561KT	560	100	0.880	1.3	0.85
SD1307F-681KT	680	100	1.000	1.2	0.80
SD1307F-821KT	820	100	1.300	1.1	0.75
SD1307F-102KT	1000	100	1.600	1.0	0.65

Note:
Isat: DC current at which the inductance drops 10% from its value without current.
Irms: DC current that causes the temperature rise (△T =40°C) from 20°C ambient